Owners manual

PREFACE

You have purchased our scooter,congratulations and thank you for putting your trust in us.

This model is a sturdy scooter in modern design.

Its sound construction, the meticulous selection of materials, the advanced manufacturing techniques and conscientious work of dedicated employees provides the scooter with all the characteristics such as economical operation, quality, reliability and its lasting value.

We cannot be held liable for any consequential damage caused by accessories not approved by the factory.

The scope of delivery and version of the scooter is solely determined by the purchase agreement concluded with the dealer.

This operating manual includes important instructions for handling your light scooter. Read it carefully, because professional handling combined with regular care and maintenance helps to maintain the scooter's value and is one of the requirements for warranty claims.

We wish you at all times a safe journey.

Yours

Safety symbols and notes

Please observe the following:

WARNING
Precautionary measures against the risk of accidents, injury and /or death.

FIRE HAZARD
The vehicle is equipped with a catalyst,this results in extremely high temperatures on the exhaust system(risk of burning)

CAUTION
Important instructions and precautionary rules to avoid damage to the vehicle.Nonobservance can lead to the warranty becoming void.

NOTE
Special instructions for better handling during operation, inspection adjustments and service activities.

OVERVIEW AND OPERATION

Identification number, engine number.....3
View of vehicle.....4-7
Instrument, handlebar instrument.....8
Ignition lock and fork-column lock.....9
Storage box, luggage hooks.....10
Fuel, fuel tank.....11
Tank cap.....12
Side stand, parking stand.....13

SAFETY TEST

Checklist.....14
Load and lights.....15
Ride safely.....15

RIDING INSTRUCTIONS

Ride economically and environmentally.....16
Running-in instructions.....17
Starting.....18-19
Brakes.....20-21
Stopping the engine.....21

SERVICE INSTRUCTIONS

Servicing the scooter / cleaning agents.....22-23
Winter operation and corrosion protection.....23
Repairing paint damage / servicing the tyres.....24
Lay-up commission.....24
Technical modifications, accessories and spare parts.....25

CONTENTS

NOTES ON MAINTENANCE

Engine oil....26-28
Transmission oil....28
Checking steering bearing, telescopic fork....29
Tyres....30
Front wheel brake....31-32
Rear wheel brake....33
Adjusting the play of the twist grip throttle control....34
Cleaning the air filter....35
Cleaning the spark plug....36
Fuse....37-38
Battery....39-41
Changing the light 42-47
Adjusting the headlight....48
Fault diagnosis tester....49-50

TECHNICAL DATA

Engine....51
Power transmission....52
Chassis....52
Lubricants and operating fluids....53
Electrical equipment....53
Dimensions and weights....54

WARRANTY AND SERVICE DATA

Warranty conditions....55
List of wear items....56-57
Inspection items....58-60
Proof of maintenance....61-62
Circuit diagram....63

Identification number

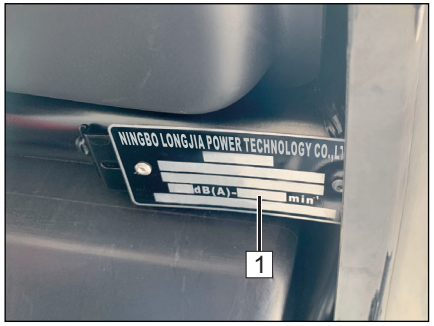

The description for right-hand side is viewed from the driver.

The identification number (1) is located on the rear part of the frame below the right underside cover.

Chassis number

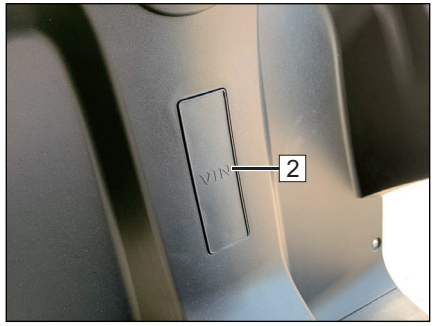

The chassis number is located on the frame behind the cover (2).

Engine number

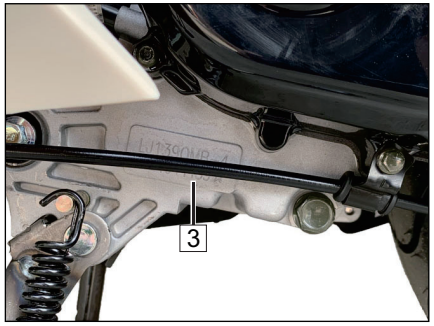

The engine number (3) is located on the front part the left crankcase.

Key

With the scooter you get two separate indefinite keys for:

- Ignition lock, Coolant storage box and storage box.

Keep the spare key at a safety place.

Right-hand side view (Version 1)

1 Storage box with tool kit
2 Spark plug
3 Engine oil filter cap
4 Battery box and fuse
5 Ignition and fork-column lock
6 Brake fluid container for front wheel brake
7 Handbrake lever for front brake

Left-hand side view (Version 1)

8 Handbrake lever for rear brake
9 Instrument
10 Kick starter
11 Parking stand
12 Transmission oil filler screw
13 Air filter
14 Side stand

Right-hand side view (Version 2)

1 Storage box with tool kit
2 Spark plug
3 Engine oil filter cap
4 Battery box and fuse
5 Ignition and fork-column lock
6 Brake fluid container for front wheel brake
7 Handbrake lever for front brake

Left-hand side view (Version 2)

8 Handbrake lever for rear brake
9 Instrument
10 Kick starter
11 Parking stand
12 Transmission oil filler screw
13 Air filter
14 Side stand

OVERVIEW AND OPERATION

Instrument

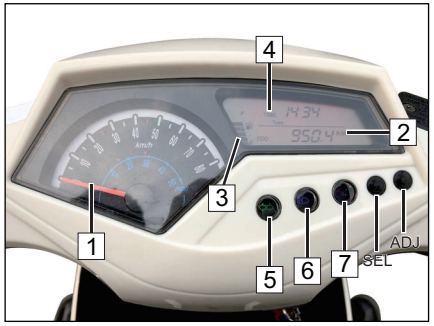

1 Speedometer km/h/mph
2 Odometer/Trip km/mile
3 Fuel indicator
4 Date/Time

Instrument lights

5 Left and right direction indicator green
6 High beam indicator blue
7 FI Indicator oranger

Handlebar instrument, left

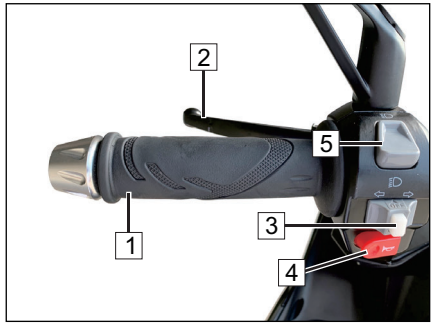

1 Fixed grip
2 Handbrake lever for rear brake
3 Direction-indicator switch
Switch to left
Left indicator on
Switch to right
Right indicator on
Push button for switch off
4 Push-button:horn
5 High beam indicator
high beam
low beam

Handlebar instrument, right

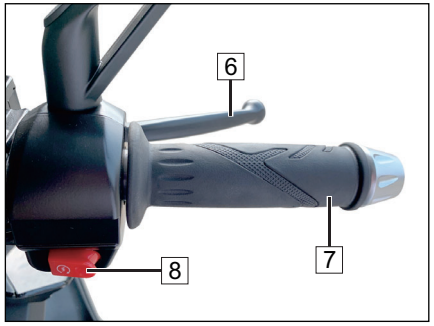

6 Handbrake lever for front brake
7 Throttle
8 Starter button

Instrument

1. Model ODO, long press SET+ADJ, reset clock. Short press SEL, change hour-minites-year(2013-2043)-month-date-week. Short press ADJ the character will increase1, long press ADJ, the character will increase quickly. 5 seconds without action, it will return to ODO.

2. Short press ADJ, chang ODO(clock)-Trip (year)-Trip(month-day).

3. Mode TRIP, long press SEL+ADJ, short mileage reset to 0.

4. Mode ODO, long press ADJ, change between metric system and British system.

Ignition and fork-column lock

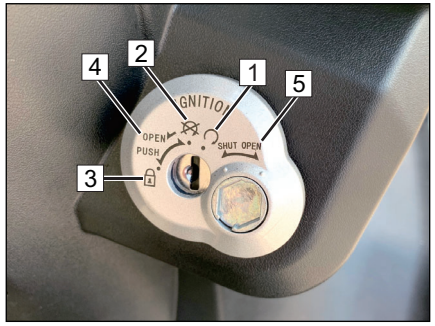

WARNING

While riding, do not switch the ignition off " ⊗ "!

NOTE

Keys

With the scooter you get two indefinite ignition keys. Keep the spare key at a safety place.

Key positions

NOTE

Activate the parking light only for a limited period. Take into account the charge ot the battery.

The key can be removed in positions" ⊗ " and " 🔒 ".

(1) Operating position
Ignition and all circuits activated.

(2) Ignition off
Fork column not locked (handlebars can be freely turned to the left or right).

(3) Fork column locked and ignition off
Turn the handlebar to the left as far as to the stop.
Push and turn the key to the left until it is in the LOCK 🔒 position.
The fork column is now locked.

(4) Open
Fork column not locked (Push and turn the key to the left open the seat).

(5) Shut open
Use the tools of the keys, inset position 5 and turn it, the lock hole protector can be close or open.

Storage box

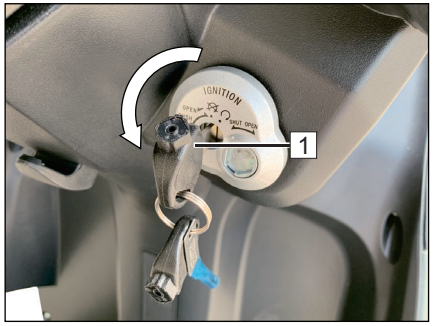

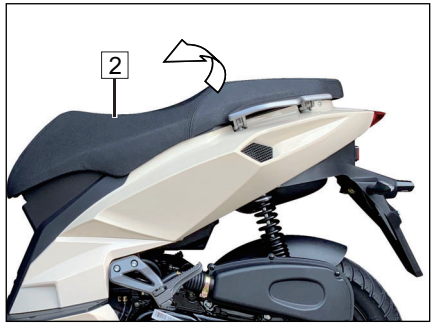

- Do not store valuables in the box.
- Make sure that the seat has been locked completely after it was pressed down.
- Take out valuables before washing to avoid wetting these objects.
- Do not place thermal sensitive objects in the box because of engine's heat and high temperature.

Unlock
- Insert the ignition key (1) into the lock turn to the left to open.

Lock
- Press down the seat (2) until the lock is engaged.
- Pull out the ignition key.

Never leave the key in the storage box.

WARNING
After the seat is closed check if it was locked firmly! -Risk of accidents!

Maximun load capacity: 10 kg

Luggage hooks

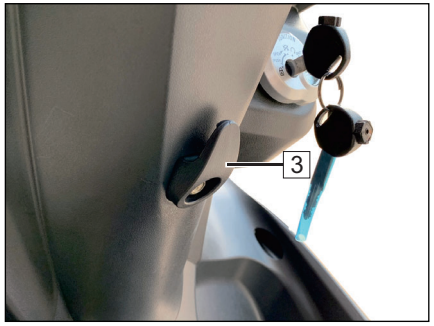

Use the hooks (3) only for small baggage pieces.

CAUTION
Maximum load capacity: 1.5 kg
Do not transport bulky loads.

Fuel, fuel tank

⚠ **WARNING**

Fuel is highly inflammable and can explode. Do not smoke or bring a naked flame near the fuel tank.

Fuel expands under the influence of heat and the sun. Therefore,never fill the tank to the brim. Never fill the tank while the engine is running.

Never bring a glowing cigarette or naked flame near an open tank, because fuel vapour could suddenly ignite.

Fuel stock, tanking

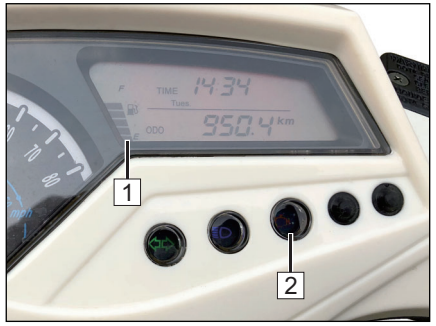

Malfunction Indicator Lamp

- When the fault light (2) flashes, indicating that the electronic control system failure, please check with the local dealer.

NOTE

The fuel indicator (1) is active when the ignition is turned on.

The scale with the tank symbol indicates fuel storage volume status

E = Empty
F = Full

When the fuel level is low, the last section of the fuel level indicator flashes, please replenish the fuel in time.

Filling up with fuel

-Use only premium lead-free fuel
-Use fuel containing up to 5% ethanol by volume (E5)
Unleaded fuel min.95 Octane

Tank cap

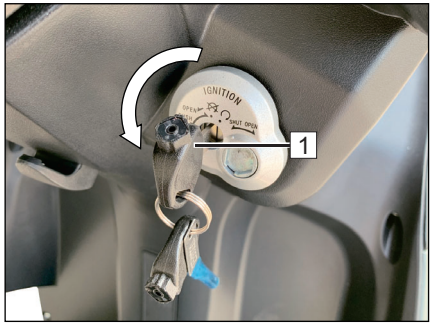

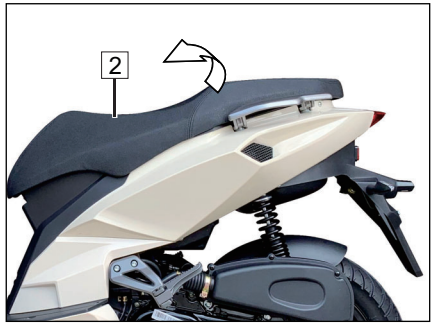

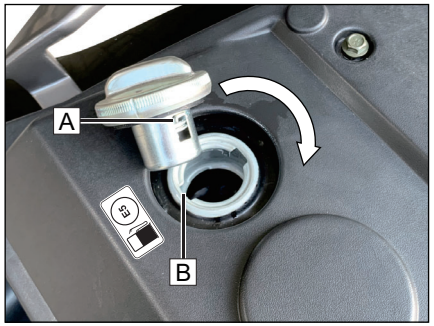

NOTE

The tank cap is located under the seat.

Unlock:

- Insert ignition key (1) into the lock and turn the key to the left, open the seat (2).
- Turn the tank cap(3) counter-clockwised and open the tank cap.

LOCK:

- Align A to B, press the tank cap and turn it clockwised.
- Press down the seat until the lock is engaged.
- Pull out the key.

NOTE

Fuel

Use fuel containing up to 5% ethanol by volume : E5

Unleaded fuel min. 95 Octane

Side stand and parking stand

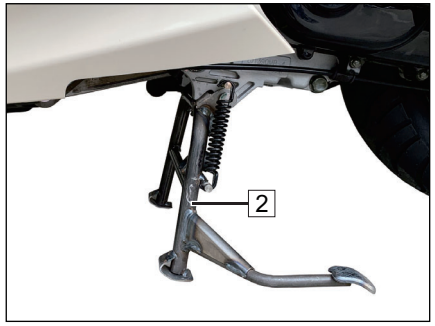

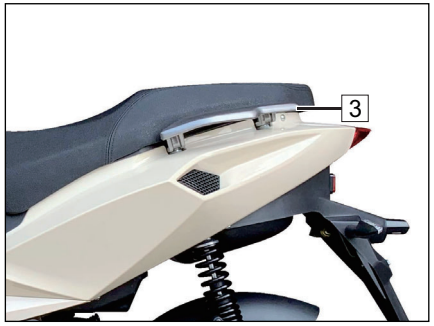

Propping up the scooter on the side stand.

⚠ **WARNING**

Always make sure that the stand is resting on firm ground. On sloping roads, always park the scooter facing uphill.
It is essential that the side stand is folded up before starting off ! -Risk of accidents!

Side stand

☞ **NOTE**

The scooter is equipped with a side stand switch. If the side stand is folded up the engine is shut off and will not start.

- Switch off the engine.
- Put your left hand on the left-hand handlebar grip.
- Hold with your right hand the holder grip (3).
- Fold out the arm fo the side stand(1)as far forward as it will go and stop by foot.
- Slowly tilt the scooter to the left until its weight is supported.

Parking stand

- Switch off the engine.
- Put your left hand on the left-hand handlebar grip.
- Hold the holder grip(3)with your right hand.
- Push the parking stand (2) down until the two skids are on the ground.
- Put you full body weight on the operating mandrel of the main standard.
- Pull the scooter towards the rear and simultaneously upwards onto parking stand.
- Check that the scooter is standing firmly.

Checklist

Before each ride,carry out a safety check using the checklist.
Take the safety check seriously. Carry out maintenance activities before you start your ride or ask a specialized dealer to do so.
This will provide you with the certainty that your motorcycle corresponds to traffic regulations. A technically faultless motorcycle is a basic requirement for the safety of both yourself and other road users.

Before starting your ride, check the following:

- Steering (smooth and free play)
- Engine oil quantity
- Fuel quantity
- Front brake
- Rear brake
- Tyres (profile and pressure)
- Telescopic fork
- Load / lights
- Total weight
- Lights
- Brake fluid (lever)
- Brake (operation)

In case of problems or difficulties, contact a dealer, who will do everything possible to assist you.

⚠ WARNING
While the engine is running or the ignition is on , do not touch the ignition system.

FIRE HAZARD
The exhaust system becomes very hot. While riding,idling or parking,make sure that to inflammable materials (e . g . hay, leaves, grass, coverings or luggage,etc.) can come into contact with it!

Load / lights

WARNING

For the sake of your safety, use only original accessories or products released by us.

We cannot judge for each third-part product whether it can be safely used in combination with your scooter.

Nor can an official approval give such a guarantee in all cases, since the test scope is not always sufficient.

NOTE

Our accessories and approved products as well as quali fied advice are available from all specialized dealers.

Correctly loaded

- Make sure that the left-right weight distribution is balanced.
- Check that fastenings are correct and tight.
- Do not transport bulky loads.
- Do not cover the lights.

WARNING

The total allowable weight may not be exceeded.

Check the tyre pressure.

Checking the lights

WARNING

Before any ride, check the operation of all lighting components.

- Check that the headlamps and lenses are clean.

Ride safely

CAUTION

Riding safety is largely also determined by the manner of riding.

Therefore:

- Put on a tested / approved safety helmet and correctly close the buckle.
- Wear suitable protective clothes.
- Rest your feet on the footrests.
- Do not ride if your riding ability has been compromised.

Your reactions can be adversely affected not only by alcohol, but also by drugs and medicines.

- Strictly observe all traffic regulations.
- Always adapt your riding speed to the traffic and road conditions.

On smooth,slippery roads take into account that your riding stability and braking power are limited by the grip of the tyres on the road top.

Ride economically and be aware of the environment

Fuel consumption, environmental pollution and wear of engine, brakes and tires depend on various factors.
Your personal riding style is highly determinant for economical fuel consumption and exhaust gas and noise generation.
While idling, the engine takes a long time to warm up to operational temperature.

Avoid rapid acceleration
Open the throttle not further than needed, in order to reduce fuel consumption as well as pollution and wear levels.
Do not use excessive revs; change up as soon as possible and do not change down until it is necessary to do so.

Ride as evenly as possible and look ahead as far as possible.
Unnecessary acceleration and hard braking cause high fuel consumption and increased pollution levels.

Different riding conditions affect fuel consumption. The following conditions are unfavourable for fuel consumption:
- High traffic density, especially in big cities with many stops for traffic lights.
- Frequent short rides with repeated starts and warm-ups of the engine.
- Riding in a column of motorcycles at low speed, meaning riding with relatively high revs.

Plan rides ahead of time in order to avoid heavy traffic.

Fuel consumption is also affected by conditions that are out of your control, for instance, poor road condition, hills, riding in winter.

Observe the following aspects for economical fuel consumption:
- The planned inspection intervals must be closely observed.
- Regular service by a specialized dealer will guarantee not only continued operability, but also economical fuel consumption, low environmental pollution and a long lifespan.
-Check the tire pressure every two weeks.

Low tire pressure increases rolling resistance. This increases fuel consumption and tyre wear and adversely affects riding behaviour.
- Continually check fuel consumption.
- Frequently check the engine-oil level.

Running-in

Running-in instructions for engine and transmission.

CAUTION

Excessive revs while running-in the engine increases the wear of the engine.
Engine faults during the running-in period must be immediately reported to a specialized dealer.

NOTE

During the running-in period, ride in frequently changing load and rpm ranges. Select winding and slightly hilly routes. Avoid constantly low rpm counts and full throttle under load.

- During the first 500 km:
Less than 1/2 throttle.

- Up to 1.000 km:
Less than 3/4 throttle.

CAUTION

The first inspection must be carried out immediately after the first 1.000 km.

You can save yourself delays by making an appointment with a specialized dealer in advance.

Running-in new tyres

CAUTION

New tyres have a smooth surface. They must therefore be roughened by carefully running them in at various slanted positions.
Only then will the surface obtain its full grip!

Running-in new brake linings

WARNING

New brake linings must be run-in and will not have their full friction power until after 500 km.
The slightly reduced braking effect can be compensated for by an increase in the pressure on the brake lever.
During this period, avoid unnecessary hard braking actions.

Starting with the electric starter

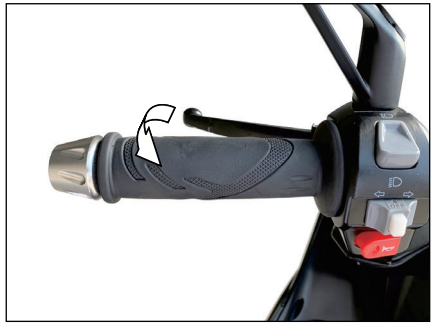

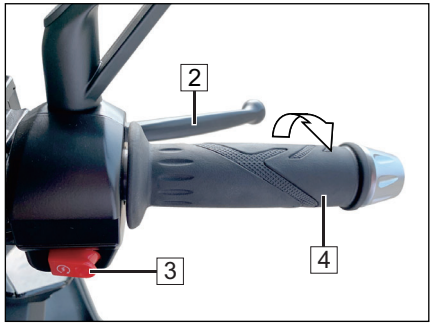

⚠ WARNING

Propping up the scooter with the parking stand. Operate the rear handbrake lever to avoid a moving of the scooter.
Avoid high engine rpm's while the vehicle is standing still , otherwise the clutch will engage.

NOTE

Every scooter is equipped with side stand switch. When the side stand is fold up, can start the engine. When the side stand is released, can't start the engine.

Before starting

- Propping up the scooter with the parking stand.
- Turn the ignition lock (1) with the ignition key to its operating position" ".
- Do not open the throttle (4).
- Pull and hold the handbrake lever (2).
- Operate the start button (3).
- If the engine can not be started after the starter motor is running for 3-5 seconds, open the throttle(4)1/8-1/4 turns and start again.
- Push the scooter off its parking stand.
- Mount the scooter.
- Release the brake before riding.

CAUTION

If the engine won't start immediately, release the start button,wait a few seconds and push it again. Each time,push the start button for just a few seconds in order to save the battery. Never push the start button for more than 10 seconds.

⚠ WARNING

Never allow the engine to run in an enclosed space. Exhaust gases are highly toxic and can kill.

Starting with kick starter

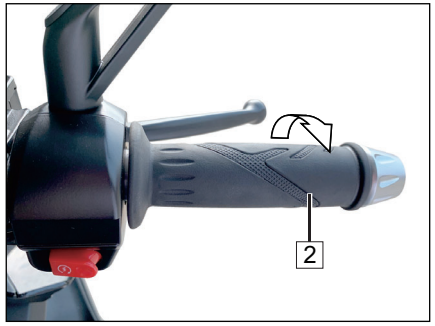

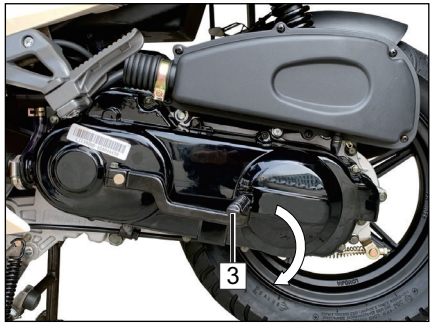

CAUTION

After starting the engine , check that the kick starter lever (3) is returned to its normal position.

- Propping up the scooter when operating the kick starter.
- Turn the ignition lock (1) with the key to its operating position " ".
- Do not open the throttle (2).
- Depress the kick starter lever(3)quick and the engine will start.
- After the engine is running return the kick starter lever to its normal position.

NOTE

Use the kick starter from time to time to maintain its function.

Braking

Wet brakes
Washing the scooter or riding through water or rain can delay the braking effect due to wet or (in winter) ice-covered brake discs and linings.

⚠ **WARNING**
The brakes must first be operated until they are dry.
Salt film on the brakes
When riding on salted streets without braking for a while, the full braking effect may be delayed.

Oil and grease

⚠ **WARNING**
The brake discs and linings must be free of oil and grease!

If the scooter is not used for a while , a rust film may form on the brakes and thus increase the braking effect. A thick rust film can cause the brakes to lock up. When setting out on a ride after a long lay-up period, carefully operate the brakes several times until they work normally.

☞ **NOTE**
Make sure you practice braking for emergency situations, but do so where you will not pose a risk to yourself or others(e.g.a deserted parking area).

⚠ **WARNING**
Operate the brakes to grind off the salt deposited on the brake discs.

Dirty brakes
When riding on dirty streets, the braking effect can be delayed due to dirty brake discs and linings.

⚠ **WARNING**
Operate the brakes until they are clean. Lining wear is increased by dirty brakes!

Braking

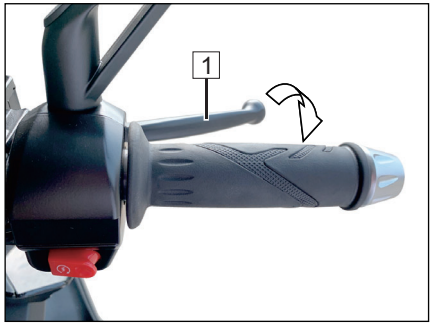

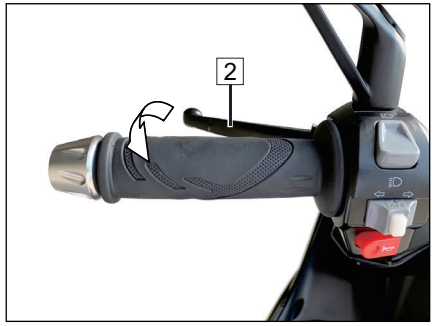

Stopping the engine

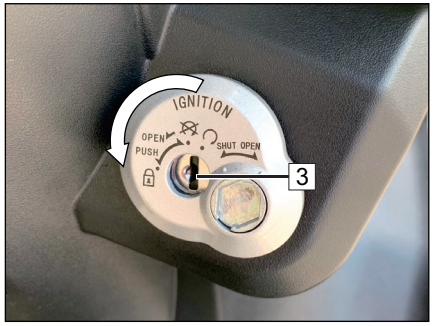

Braking
The front brake and rear brake are operated independently from each other.
The front brake is operated via the right-hand brake lever(1)on the handlebars,and the rear brake is operated via the left-hand brake lever(2).

When stopping or slowing down,release the throttle gas and operate **both** brakes at the same time.

On tight curves, sandy / dirty streets, wet asphalt and icy roads,use the front brake carefully: if the front wheel locks , the bike will slide sideways.
Brake with care.Locked wheels do not have much braking effect and can lead to skidding / crashing. In principle,do not brake on a curve, but before the curve.
Braking on a curve increases the danger of sliding.

- Turn the ignition lock (3) with the ignition key to the position" ⊗ ".
- Pull out the ignition key.

Servicing the scooter / cleaning agents

NOTE
Regular, expert service will help maintain the value of your scooter and is a condition for guarantee claims for corrosion and other such damage.

CAUTION
Rubber and plastic parts will be damaged by caustic or penetrating cleaning agents or solvents.

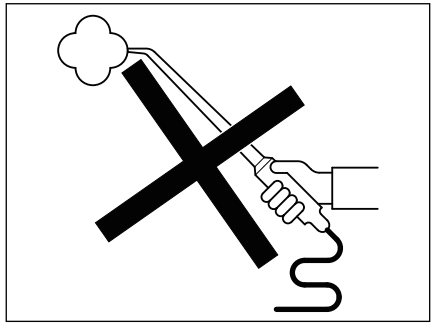

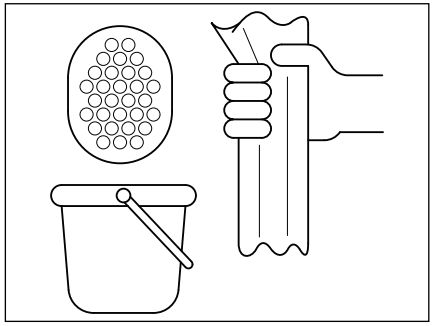

WARNING
Always carry out a brake test after cleaning and before starting a ride!

CAUTION
Do not use steam or high-pressure jet devices!
Such devices can damage seals, the hydraulic braking system and the electrical system.

CLEANING
- To wash the motorcycle,use a soft sponge and clean water.
- Afterwards,dry off with a polishing cloth or chamois.
- Do not wipe off dust or dirt with a drycloth, to avoid scratching the paint or covering.

Servicing the scooter / cleaning agents

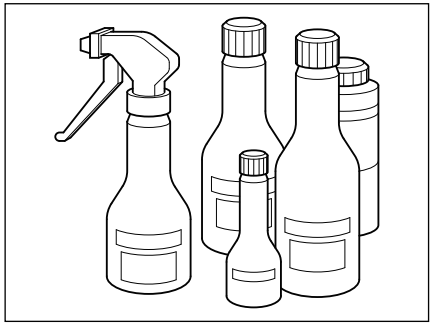

PRESERVATION AGENTS
When necessary, the scooter must be preserved with commercially available preserving and cleaning agents.

- By way of precaution (especially in winter), regularly treat parts liable to corrosion with preservation agents.

CAUTION
Never use paint-polishing agents on plastic parts.

- After a longish ride,thoroughly clean the chassis and the aluminium parts and preserve them with a commercially available anti-corrosion agent.

Operation in winter and anti-corrosion protection

NOTE
Protect the environment by using only environmentally friendly preservation agents, and use them frugally.

Use of the motorcycle in the winter can cause considerable damage due to the presence of salt on the roads.

CAUTION
Do not use hot water, which would increase the effect of the salt.

- At the end of each ride, wash the motorcycle with cold water.
- Thoroughly dry the motorcycle.
- Treat parts liable to corrosion with waxborne anti-corrosion agents.

Repairing paint damage

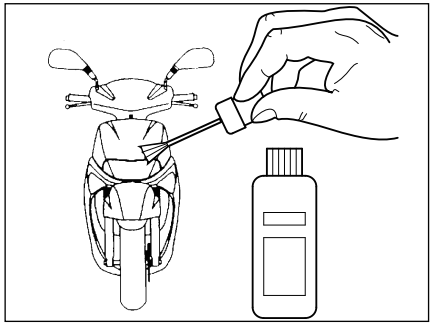

Minor paint damage should be immediately repaired.

Servicing tyres

If the scooter is not used for a longer period, it is recommended to support the scooter so that its weight is not on the tyres.
You can prevent the tyres from becoming dry and brittle by spraying them with a silicone-rubber treatment. First thoroughly clean the tyres.
Do not store the scooter or the tyres in hot spaces (such as a boiler room) for longer periods.

⚠ WARNING
A minimum tyre-profile depth of 2.0 mm must be maintained at all times.

Lay-up / commission

Lay-up
- Clean the scooter.
- Remove the battery.
  Observe the maintenance instructions.
- Spray suitable lubricants onto the brake lever, clutch lever joints, the side standard and main-standard bearings.
- Rub bright / chromium-plated parts with acid-free grease(Vaseline).
- Store the scooter in a dry room and jack it up so that its weight is not on the wheels.

NOTE
Combine lay-up / commission activities with an inspection by a dealer.

Commission
- Remove the preservation agents from the outside.
- Clean the motorcycle.
- Install the charged battery.
- Preserve the battery terminals with terminal grease.
- Check / adjust the tyre pressure.
- Check the brakes.
- Carry out activities according to the inspection plan.
- Carry out the safety checks.

Technical changes, accessories and spare parts

⚠ **WARNING**

Technical changes to the scooter can lead to invalid warranty.

Should you want to make technical changes, observe our guidelines. This will serve to prevent the scooter from being dam-aged and the traffic and operational safety being retained. A specialised dealer can carry out these activities with meticulous care.

Always consult a dealer before buying accessories or making any technical changes.

CAUTION

We recommend using only approved accessories and original spare parts for our scooter.

This is in your own interests : the safety, suitability and reliability of these accessories and parts will have been tested specifically for the scooter.

Although we keep track of the market, we neither can evaluate nor be held liable for the quality of non-approved accessories and parts , even if they have a certificate of acceptance from an officially recognised technical testing / supervision agency, or a license issued by the authorities.

For approved accessories and original spare parts, see a specialised dealer.
He will also ensure that they are professionally installed.

Engine oil

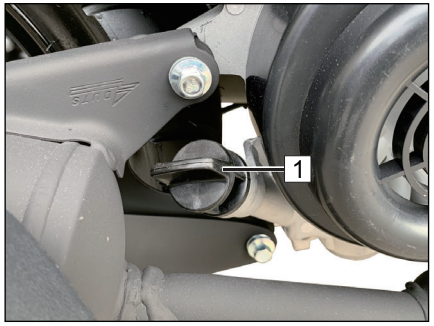

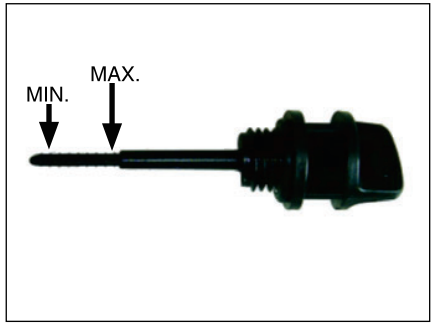

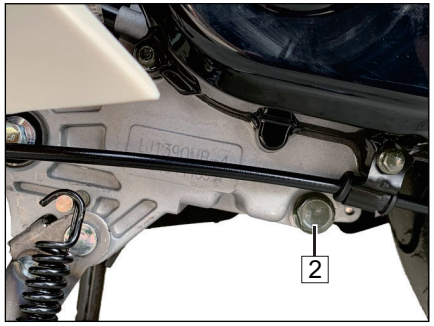

Checking the oil level

CAUTION

Checking the oil while the engine is cold will lead to a wrong measurement and therefore the wrong oil quantity. In order to avoid engine damage, never exceed the maximum oil level nor let it drop below the minimum level.

NOTE

Make sure that the scooter during oil-level checks stands level in all respects.Even the slightest inclination towards the side will produce measurement errors.

- Stop the warmed-up engine, wait for approx. 5 minutes and hold the scooter up-right.
- Propping up the scooter on the parking stand.
- Stop the engine and remove the oil filler cap (1) on the lower right of the crank-case.
- Clean the oil filler cap at the MIN-MAX aera with a clean rag.

CAUTION

For checking the oil level only insert the oil filler cap and don't screw in! Otherwise there will be a wrong measurement in order to avoid engine damage.

- The oil level must be between the minimum and maximum marks.
- Tighten the oil filler cap by hand.

If required, replenish the engine oil SAE 15 W/40 via the oil level up to the MAX level mark.

- When change new engine oil, open the oil hole screw (2), till all engine oil is flow out, then tighten the screw (2) and add new oil via the oil level up to the MAX. level mark.
- Tighten the oil filler cap (1).

Engine oil

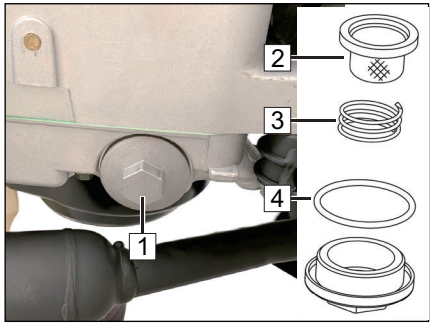

CAUTION

Do not use additives . Since the oil also serves to lubricate the clutch, do not use car engine oils supplemented with friction modifiers (such energy-conserving oils can lead to the clutch slipping). Use a suitable, light engine oil for scooters , such as Motorex SAE 15W/40 mineral oil API (SG or higher).

- If required, replenish the engine oil(for classification and viscosity, see the table) via the oil-filler opening up to the maximum level marking.

Clean oil filter element

If the oil filter element is also to be replaced or cleaned, perform the following procedure.

- Remove the oil strainer cover (1), spring (3) and oil filter element(2).
- Replace the O-ring (4) new.
- Install the new or clean oil filter element and the oil strainer cover.

Install torque:13-17 N.m

Engine oil

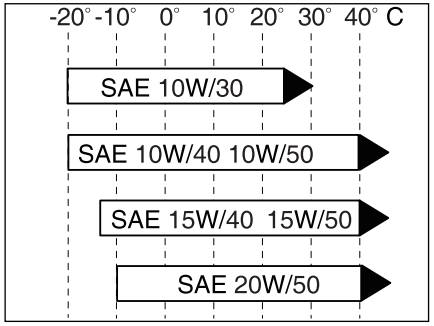

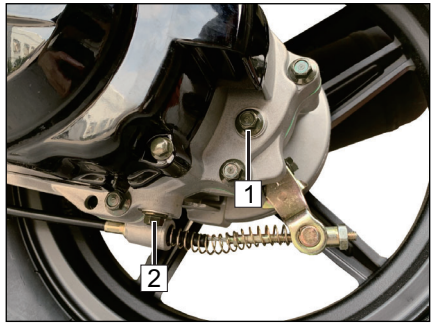

Recommended grade:
Per API:SG or higher or also with additional release status: ACEA A3/96 (CCMC G5)

Recommended viscosity:

Viscosity depends on the outside temperature. For short while, the temperature may exceed or fall short of the limits of the SAE grades.

The recommended viscosity grade SAE 15 W/40 covers the ambient temperature range -15℃ to +40℃ and therefore represents the optimum for out latitudes.

Checking the transmission oil level
- Stop the warmed-up engine, wait for approx. 5 minutes.
- Propping up the scooter on the parking stand.
- Remove the oil filler screw (1)and check if the oil level is below the oil-filler opening.
- If required, replenish transmission oil Hypoid SAE 80W-90 via the oil-filler opening.
- When change new transmission oil, open the oil hole screw(2),till all transmission oil is flow out, then tighten the screw (2) and add new oil via the oil-filler opening.
- Tighten the oil filler screw(1).

Checking the steering bearings

NOTE

The telescopic fork should not jam up when turned and it should swing back lightly to both end positions.

- Pull the hand brake to block the front wheel brake.

- Hold the handlebar with both hands and try to move the handle bar(1)back and forth.

If the fork column bearing shows noticeable play, it must be adjusted by a specialised dealer.

Checking the telescopic fork

- Pull the hand brake to block the front wheel brake.

- Now pump the fork girders several times up and down using the handlebar.

- The suspension should respond perfectly.

- Check the fork girders for oil leaks.

NOTE

If damage to the telescopic fork or the spring strut is found have the motorbike examined by a professional dealer.

Tyre profile

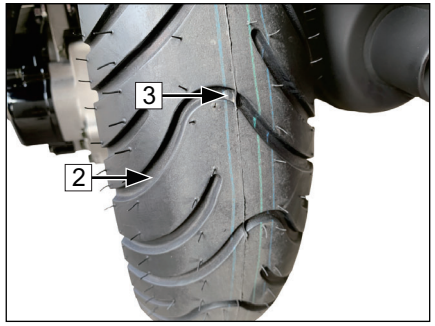

Checking the tyre profiles

⚠ WARNING

Observe the minimum profile depth prescribed by law.
Never ride without valve caps(1) . Firmly tightened valve caps prevent the tyre from suddenly losing pressure.

- Measure the profile depth at the centre (2) of the tyre's tread.

Recommended minimum profile depth:
2.0 mm
Observe the wear marks(3).

Checking the tyre pressure

⚠ WARNING

Adjust the tyre pressure according to the total weight load. Never exceed the rated total weight or the bearing capacity of the tyres.
Incorrect tyre pressure will have a considerable effect on the riding properties of the scooter and the lifespan of the tyres.

- While the tyres are cold:
- Twist off the valve caps.
- Check / adjust the tyre pressure.
- Twist on the valve caps.

Tyre pressure
One Rider: Front: 1.75Kg/cm^2 Rear: 2.00Kg/cm^2
Two Rider: Front: 2.00Kg/cm^2 Rear: 2.25Kg/cm^2

Tyre size

The standard scooter is provided with the following tyre sizes:

Front	120/70-12 56J or 51P or 51J or 51K or 51M or 58L or 58P or 58M
Rear	120/70-12 56J or 51P or 51J or 51K or 51M or 58L or 58P or 58M

All Tyres are tubeless.

⚠ WARNING

Use only tyres approved by the manufacturer. The use of non-approved tyre brands, types or sizes leads to the operating permit of the vehicle becoming null and void.Use only pairs of tyres produced by the same manufacturer.

Front wheel brake

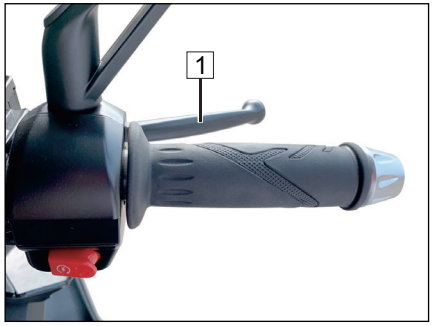

Front brake-fluid tank

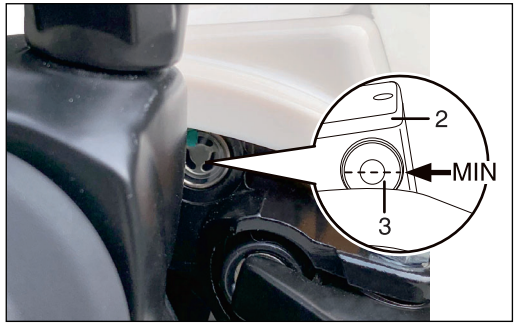

⚠ **WARNING**

Sudden changes in play or a spongy feel of the brake lever (1) can be caused by faults in the hydraulic system.
Do not ride on when in doubt about the operability of the brake system. Immediately consult a dealer.

Checking the brake-fluid level

⚠ **WARNING**

Every two years, the brake fluid must be changed by a dealer. The level must not drop below the MIN mark.Use only brake fluid of the DOT 4 classification.

CAUTION

Do not spill any brake fluid on painted or plastic surfaces as it will demage the surface severely.

- Turn the handlebars until the brake-fluid tank (2) is level.
- The brake fluid level(3)should be between the minimun (MIN) and the maximum marking (MAX).
- If air bubbles can be seen,check the brake linings for wear; if necessary, replenish the brake fluid by a dealer.

Front wheel brake

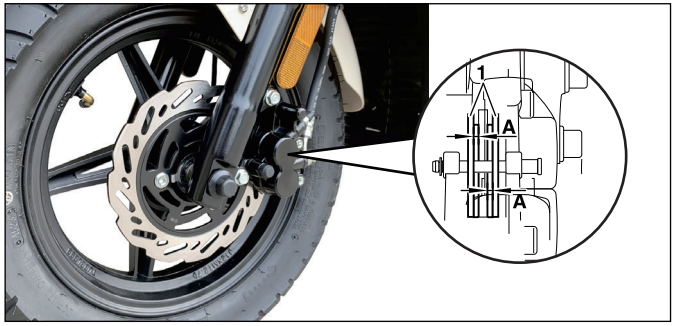

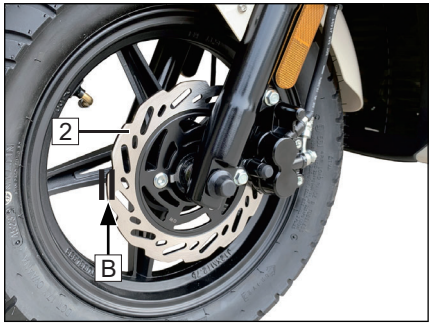

Checking the brake linings

CAUTION

The minimum lining thickness must be maintained

NOTE

For your own safety, we recommend having activities to the brake system carried out by a dealer.

- Check the thickness of the brake lining.

Minimum thickness: **A = 2.0 mm**

- If the lining thickness is below the minimum, **have the brake lining (1) replaced by a dealer.**

Checking the disc brake

- Visually inspect the disc (2).

- Check the thickness of the disc.

Minimum thickness: B = 3.0 mm

- If the disc thickness is below the minimum, have the disc (2) replaced by a dealer.

Rear wheel brake

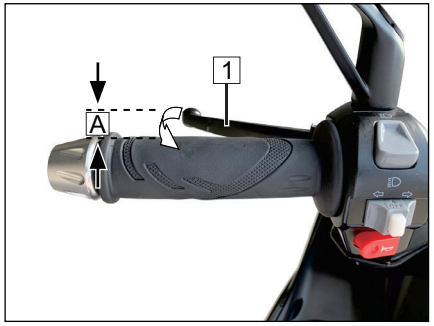

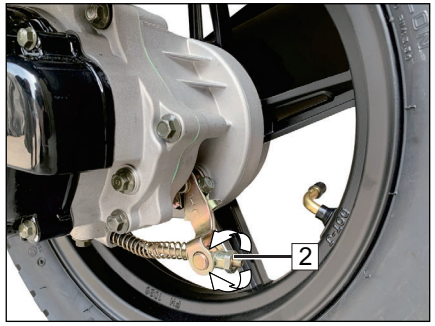

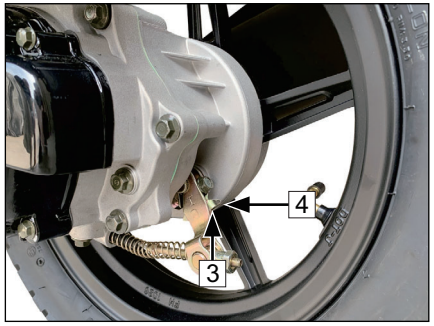

Adjusting the rear wheel brake

CAUTION

For your own safety, we recommend having activities to the brake system carried out by a dealer.

NOTE

After a longer period of operation, adjustment of the brakes is essential due to natural wear of the brake-shoe linings.

Checking

- An external sign of the brakes needing adjustment is the constantly increasing free travel (A) of the handbrake lever (1) 10-20 mm.

Adjusting

- Screw the nut (2) on the rear-wheel brake onto the brake rod until the handbrake lever reach a free travel of 10-20 mm.
- After this measurement is attained, the brake shoes should be heard brushing against the brake drum.

CAUTION

Have a dealer check the adjustment.
Checking the brake linings.

CAUTION

The thickness of the brake lining may not be lower than the minimum value.
Operate the handbrake lever(1) and visually inspect it.
Check the thickness of the lining:
The extension of the wear indicator (3) at the brake lever must be in front of the minimun mark of the scale(4)when the rear brake is depressed.
If the thickness of the lining has fallen below the minimum, have a specialised dealer replace it.

Adjusting the play of the twist grip throttle control

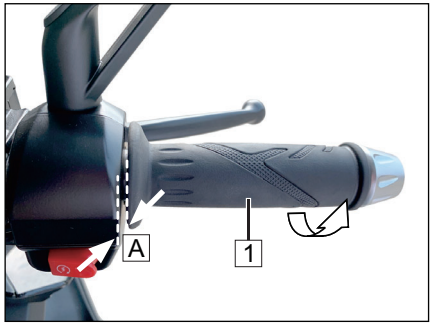

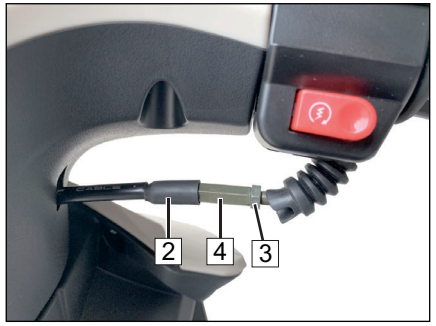

Check:
- Check the throttle cable for light move-ment by turning the twist grip(1)from closed to open position.
- Move the handlebar to check whether the throttle cable moves freely.
- Check whether the throttle cable is obstructed by other parts.
- Open the twist grip throttle control until resistance can be felt.
- Measure the play.
  Nominal value: **A = 3-5 mm**

Adjustment:
- Push back the protective cap (2).
- Slacken the lock nut (3) on the handlebar.
- Turn the setscrew (4) accordingly.
- Tighten the lock nut (3).
- Check the play.
- Push over the protective cap (2).

NOTE
If the play cannot be corrected this way, have the scooter checked by your dealer.

Cleaning the air filter

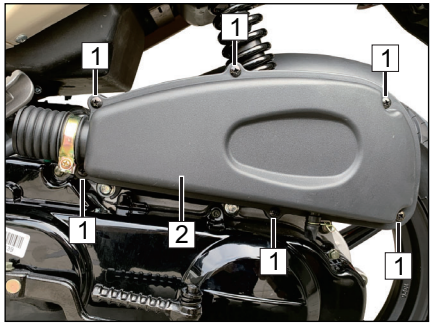

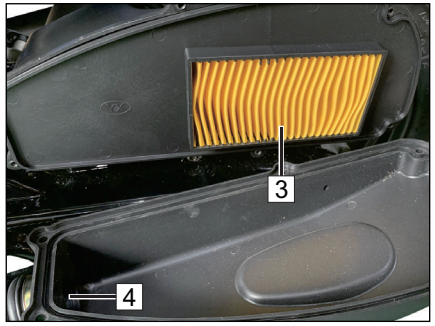

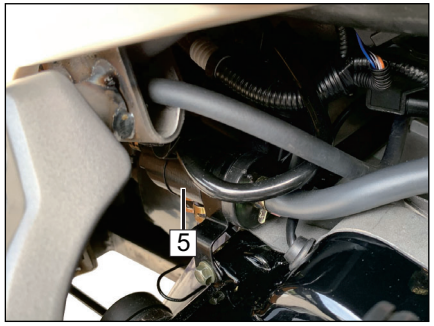

NOTE

The scooter is attached with an air filter. In case of heavy dirtiness the paper filter element (3) has to be replaced.

Disassembly and cleaning

- Remove the screws (1)and take off the air filter cover (2).
- Take off the paper filter element (3).
- Dust out the paper filter and clean with air pressure or renew if necessary.

Installation

- Clean the hole (4) before installation.
- Usually the installation takes place in reverse order to disassembly.

CAUTION

Never run the engine without air filter.

- Dust depsit is one of the major causes of reducing output horsepwer and increasing fuel consumption.
- Change the air cleaner element more frequently to prolong the engine's service life if the scooter is ride on dusty roads very often.
- Check for properly installation of the foam housing in the filter case.
- Otherwise the engine runs poorly or lead to serious engine damage.
- Be careful not to soak the air cleaner when washing the scooter. Otherwise it will cause engine hard to start.

The air inlet of oil-gas separator (5) connects with cylinder breath pipe, air outlet connects with air filter port, oil discharge outlet should face to the ground. If there's too muchoil in the oil discharge pipe, please release the oil and check the oil measure tape if the engine oil is enough.

Checking the spark plug

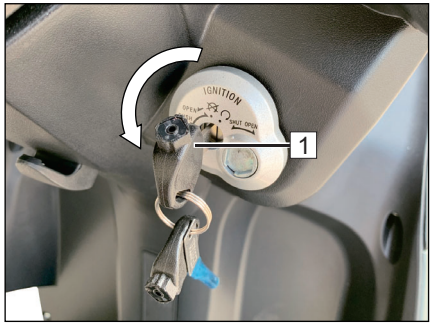

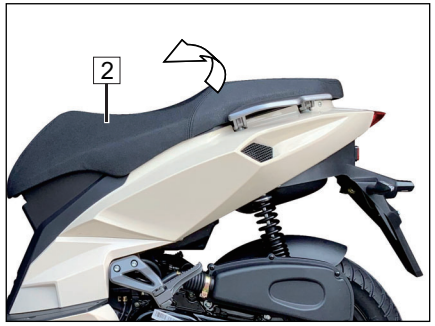

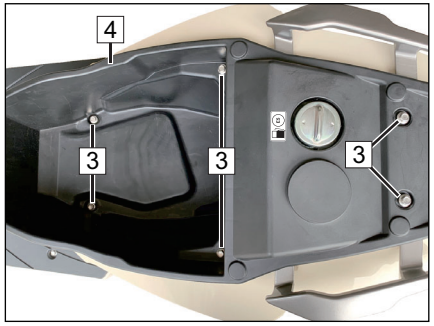

Check and change

CAUTION

Check or change the spark plug only when the engine is cold.

- Open the seat (2) with the ignition key (1).
- Remove six nuts (3) with washers from the storage.
- Take off the srorage (4) with the seat.
- Pull the spark plug connector (5).
- Unscrew the spark plug with the spark wrench from the on-board toolkit.
- Check the electrode gap (0.7-0.8mm) replace the spark plug if it is severely burnt away.
- Use a new spark plug **NGK CR7HSA** and tighten up.

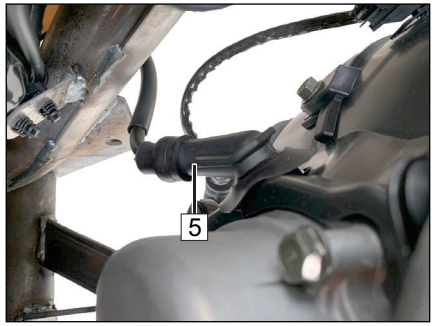

- Screw in the spark plug by hand and then tighten up with the spark wrench.

Torque 11 Nm.

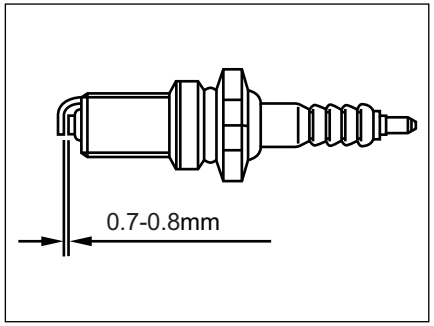

Installation takes place in reverse order to disassembly.

Checking the fuse (Version 1)

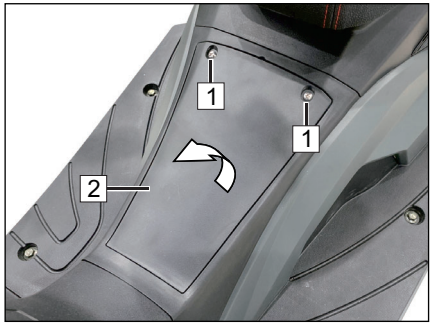

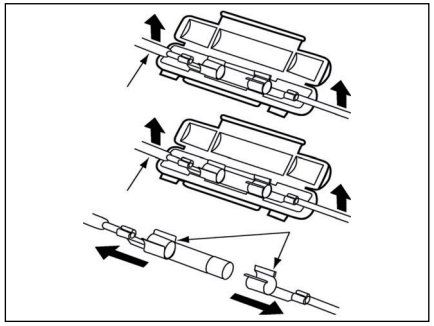

CAUTION

Never install a fuse with a larger rating, since this could destroy the entire electrical system.

The fuse is located behind the inspection cover.

- Turn off the ignition.
- Remove the two screw (1) and open the battery cover (2).
- Open the fuse case (3) and remove the fuse.
- A faulty or blown fuse must be replaced by a new one with 15 A.
- Check the fuse for correct contact. Loose fuse will blow.

Installation takes place in reverse order to disassembly.

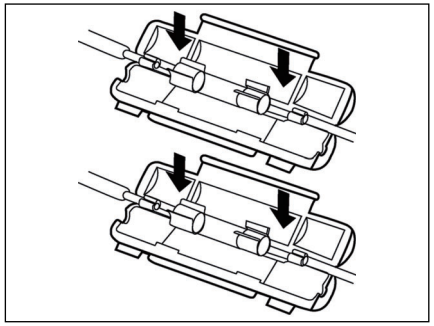

Checking the fuse (Version 2)

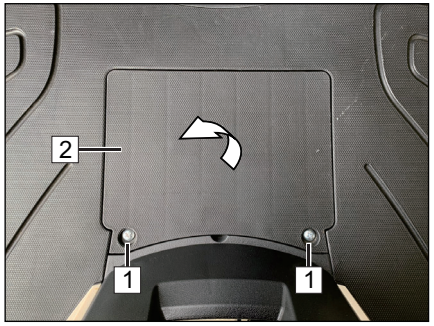

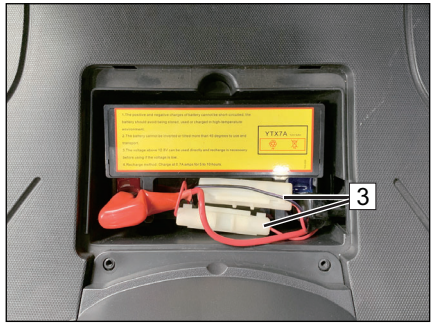

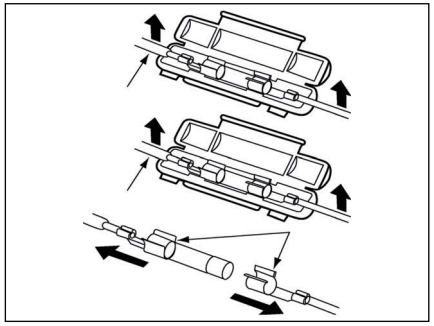

CAUTION

Never install a fuse with a larger rating, since this could destroy the entire electrical system.

The fuse is located behind the inspection cover.

- Turn off the ignition.
- Remove the two screw (1) and open the battery cover (2).
- Open the fuse case (3) and remove the fuse.
- A faulty or blown fuse must be replaced by a new one with 15 A.
- Check the fuse for correct contact. Loose fuse will blow.

Installation takes place in reverse order to disassembly.

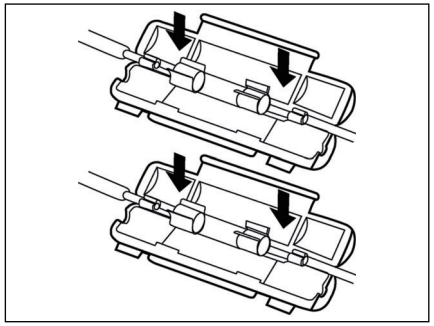

Battery

WARNING

Always wear safety glasses.
Keep children away from acids and batteries.

EXPLOSION DANGER

A battery being charged produces a highly explosive gas, which is why fire , sparks, naked flames and smoking are prohibited.

FIRE HAZARD

Avoid generating sparks and electrostatic discharges when handling cables and electrical devices.
Avoid short circuits.

DANGER-CAUSTIC ACTION

Battery acid is highly caustic, so always wear safety gloves and glasses.
Do not tilt the battery as acid can leak from the ventilation openings.

FIRST AID

If acid comes into contact with an eye,immediately flush the eye for several minutes with fresh water. Then immediately visit / call a doctor.
Acid on the skin or clothing must immediately be neutralised using acid converter or soap suds, and the spots must be flushed with plenty of water.
If acid is swallowed, immediately visit / call a doctor.

CAUTION

Do not expose batteries to direct sunlight. Discharged batteries can freeze, so they must be stored in a place where the temperature remains above 5-15°C.
Professional maintenance,charging and storage will increase the lifespan of the battery.

WARNING

Take a dead battery to a collection point. Never dispose of one with household refuse.

Charging the battery

After a long lay-up(3-4 months), charge the battery. The charging current (in amperes) must not exceed 1/10th of the battery capacity (Ah).
The battery must not be fast-charged. The battery may only be charged using a special charger approved for maintenance-free batteries.

Maintenance

Although the battery is maintenance-free. Never leave the battery discharged. Keep the battery clean and dry and make sure that the connection terminals are firmly seated.

Removing and installing the battery (Version 1)

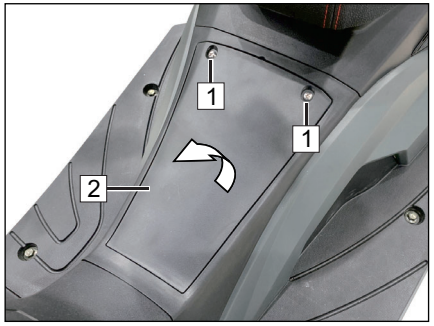

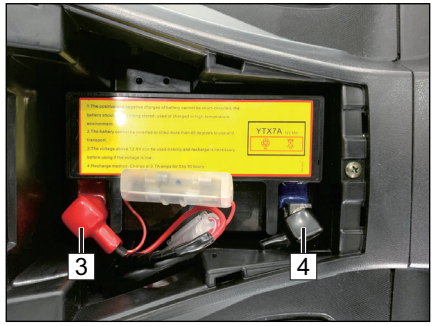

When installing the battery,first connect the plus terminal (3, red cable).

The battery is maintenance-free. Do not try to open it.

CAUTION

The battery may only be connected or disconnected while the ignition is inactive.

- Turn off the ignition.
- Remove the two screw (1) and open the inspection cover (2).

First disconnect the minus terminal (4, black cable).
Then disconnect the plus terminal (3, red cable).

- Disconnect the battery.
- Remove the battery.

Installation takes place in reverse order to disassembly.

Removing and installing the battery (Version 2)

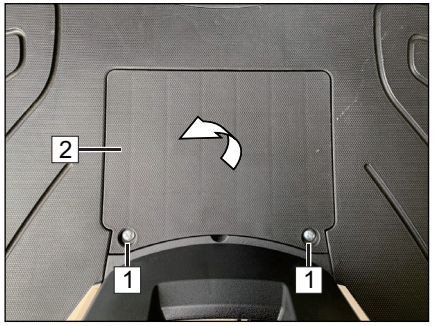

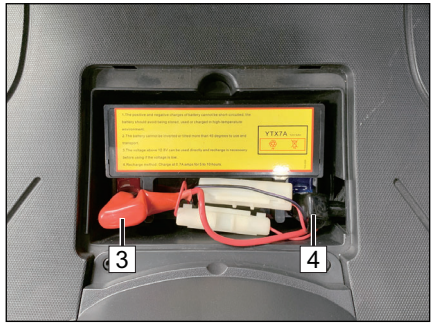

When installing the battery,first connect the plus terminal (3, red cable).

The battery is maintenance-free. Do not try to open it.

CAUTION

The battery may only be connected or disconnected while the ignition is inactive.

- Turn off the ignition.
- Remove the two screw (1) and open the inspection cover (2).

First disconnect the minus terminal (4, black cable).
Then disconnect the plus terminal (3, red cable).

- Disconnect the battery.
- Remove the battery.

Installation takes place in reverse order to disassembly.

Headlight

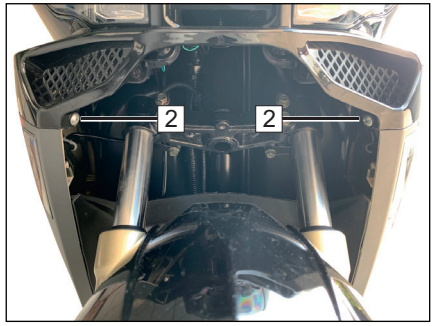

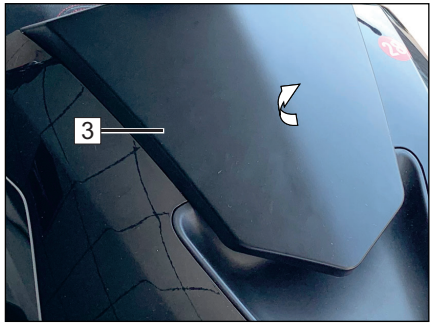

Changing the bulb

NOTE

Do not touch the bulbs with bare fingers. Hold bulbs with a clean, dry cloth when installing or removing them.

Low beam-high beam
bulb: **12V 9W/13.5W**

Front position light
bulb: **12V/1.8W**

- Turn off the ignition.
- Remove the covering screws (1)(2).
- Take off the front cover (3).
- Remove the bolt (4).
- Disconnect the connector (5).
- Take off the headlight cover .

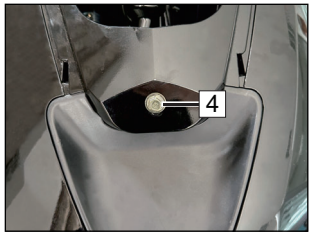

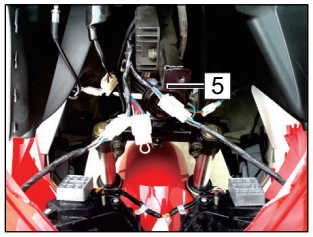

Headlight

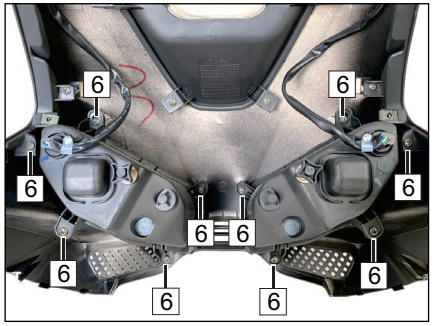

- Remove screw (6), change the left and right headlights if necessary.
- The left and right headlights are LED light source, need to change the complete light.

Installation takes place in reverse order to disassembly.

Front direction indicator

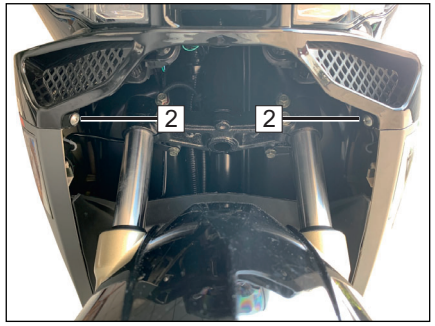

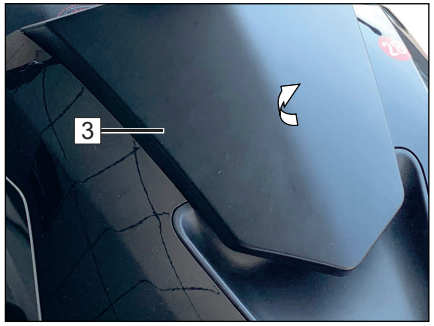

1. Remove the screws (1) and (2).

2. Take out the front shield upper cover (3).

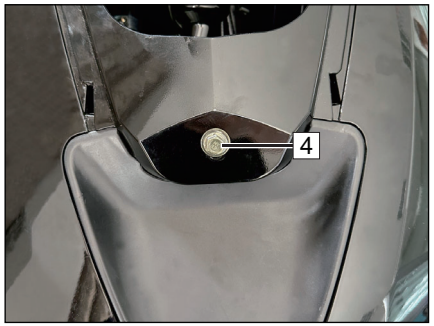

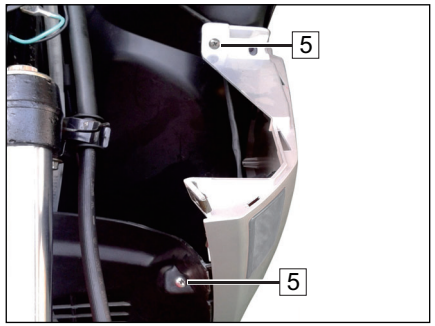

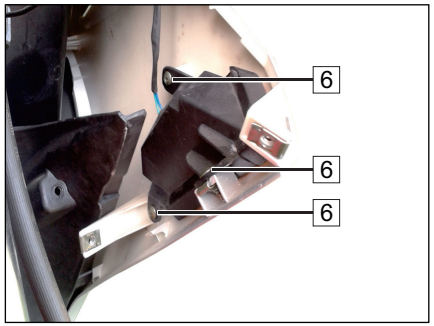

3. Remove the bolt (4).

4. Remove the screws (5) .

5. Remove the screws (6).

Front direction indicator

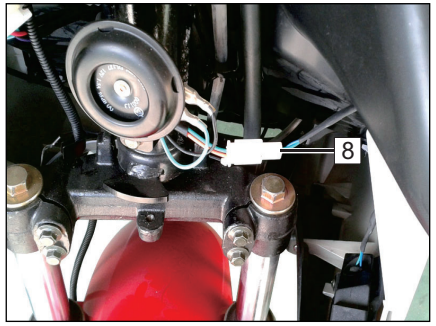

6. Take out the front direction indicator (7).

7. When install the front left direction indicaror, put the wire connecting main wire harness in front of the rear brake tube.

Front turn signal light
bulb: LED 12V 1.5W

Installation takes place in reverse order to disassembly.

Tail light and rear registration plate lamp and rear direction indicator

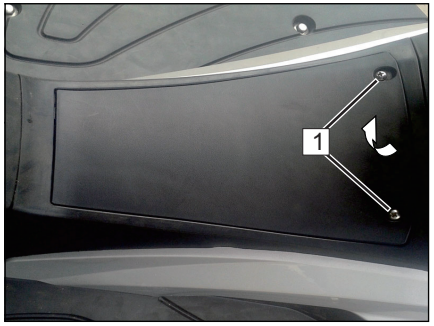

1. Remove the screws (1), take out the battery cover.

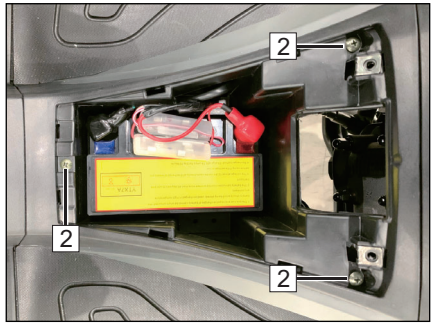

2. Remove the screws (2), take out the footrest cover.

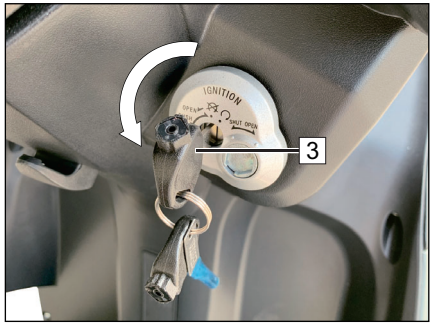

3. Open the seat (4) with the ignition key(3).

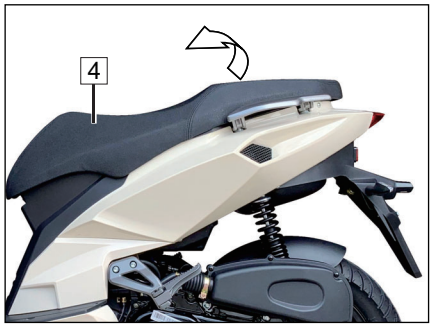

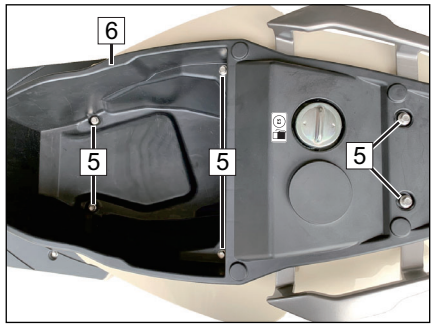

4. Remove the bolts (5), take out the luggage box (6) .

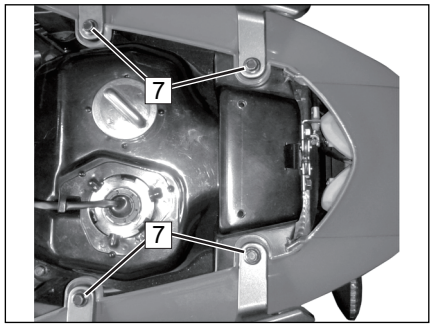

5. Remove the bolts (7).

Tail light and rear registration plate lamp and rear direction indicator

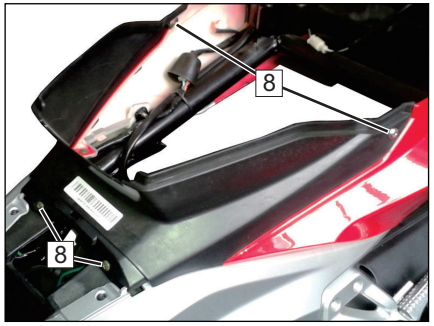

6. Remove the screws (8), take out the center cover.

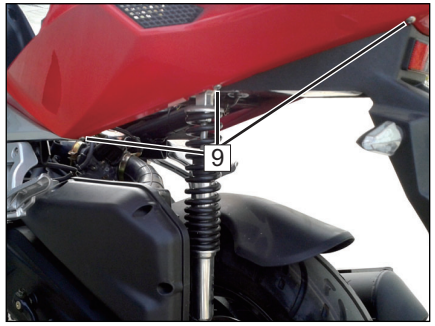

7. Remove the screws (9).

8. Take out the rear decopanel assy.

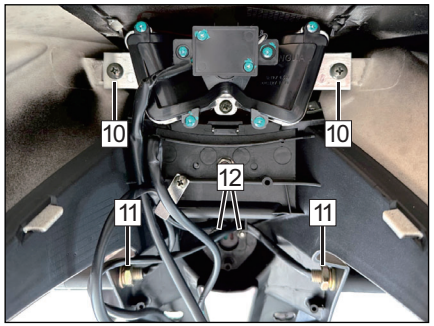

9. Remove the screws (10) and replace the rear taillight.

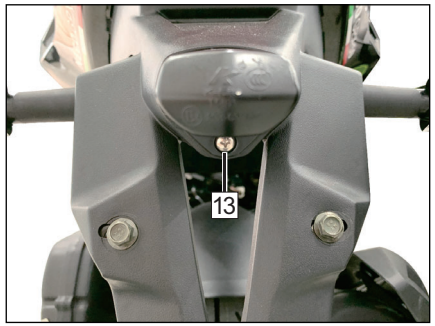

10. Remove nuts (11) and replace the rear indicator.

11. Remove the nuts (12) screw (13) and r-eplace the rear license plate light.
The rear tail light, rear left and right turn signal light, and rear license plate light are LED lights, the entire lightsneed to be replaced.

Installation takes place in reverse order to disassembly.

Tail / brake light
bulb: **LED 12V 1.7/4.5W**
Rear turn signal light:
bulb: **LED 12V 1.8W**
Rear registration plate lamp
bulb: **LED 12V 0.7W**

Check the headlamps

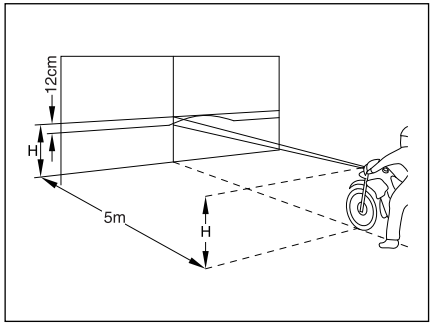

⚠ WARNING
Do not run the engine in an enclosed space (risk of asphyxiation).

Position the motorcycle on a level floor 5 m (measured from the headlamp) from a light coloured wall with a rider seated on the motorcycle and the tyres filled at the correct pressure.

- Measure the distance from the floor to the centre of the headlamp and mark the height on the wall with a cross. Draw a second cross 12 cm beneath the first cross.

Adjusting the headlamps

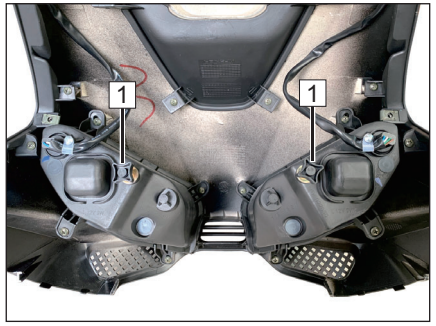

- Start the scooter and run the engine.

- Activate the dipped beam.

- Adjust the light vertically through the knob (1). Turn clockwise to raise the light height, counterclockwise to lower it.

NOTE
If you have problems adjusting the headlamps, see a specialised dealer.
An incorrect adjustment is punishable by law. Remember, you are responsible for the correct adjustment of the motorbike's headlamp.

Fault diagnosis tester

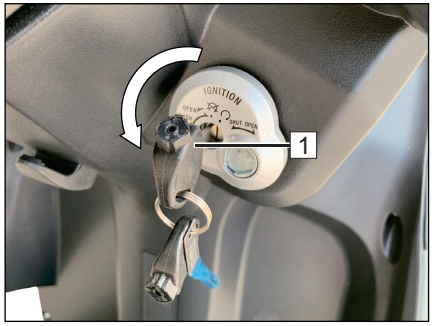

1. Open the seat (2) with the ignition key(1).

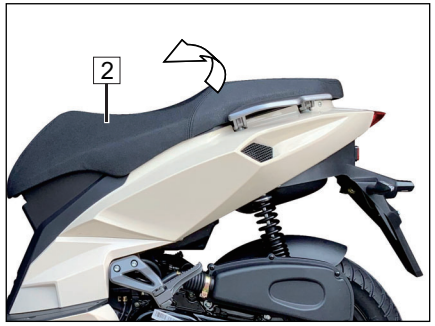

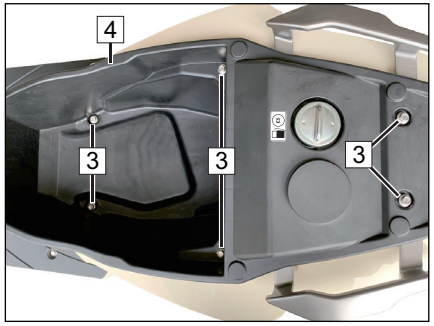

2. Remove the bolts (3), take out the luggage box (4).

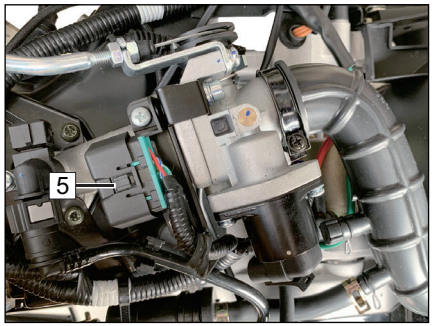

3. Fault diagnosis tester connector (5).

4. Fault diagnosis tester (6).

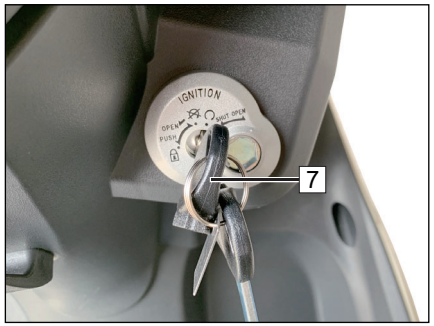

5. The ignition key(7) at " ↻ "position.

Fault diagnosis tester

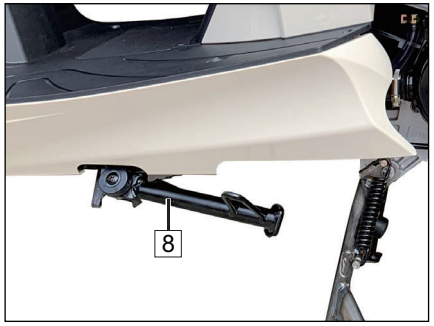

6. Side (8) switch at horizontal position.

⚠ **WARNING**

When connect the fault diagnosis tester, ignition key(7) must be at " ↻ " position, side stand (8) at horizontal position.

	LJ50QT-9M
Engine type	**LJ139QMB-4**
Construction:	One cylinder 4-stroke petrol engine
Pistion displacement:	49.6 cm^3
Bore:	ϕ 39 mm
Stroke:	41.5 mm
Compression ratio:	10.5±0.2:1
Cooling:	Fan air cooled
Maximum net power output:	45 km/h: 2.3 kW / 8000rpm 25 km/h: 1.0 kW / 6250rpm
Maximum net torque:	45 km/h: 2.9 N.m / 7000rpm 25 km/h: 2.2 N.m / 4000rpm
Fuel consumption:	45 km/h: 2.1 L/100km 25 km/h: 2.1 L/100km
CO_2 emissions:	45 km/h: 47 g/km 25 km/h: 48 g/km
Ignition system:	ECU
Spark plug:	NGK CR7HSA
Electrode gap:	0.7-0.8 mm
Idle speed:	2100±150 r/min
Air-filter:	Paper filter element
Type of starter:	Electric starter and kick starter

	LJ50QT-9M
Power transmission	
Clutch:	Centrifugal type
Transmission:	CVT
Chassis	
Scooter version:	**LJ50QT-9M**
Front suspension:	Telescopic fork
Rear suspension:	Unit swing, hydraulic shock absorption
Wheels front:	Light metal (Alu) MT2.75×12 or J12×MT2.75 or MT3.00×12
Wheels rear:	Light metal (Alu) MT2.75×12 or J12×MT2.75 or MT3.0×12 or MT3.00×12
Tires front:	120/70-12 56J or 51P or 51J or 51K or 51M or 58L or 58P or 58M tubeless
Tires rear:	120/70-12 56J or 51P or 51J or 51K or 51M or 58L or 58P or 58M tubeless
Tire pressure:	One Rider: Front: 1.75Kg/cm^2 Rear: 2.00Kg/cm^2 Two Rider: Front: 2.00Kg/cm^2 Rear: 2.25Kg/cm^2
Brakes, front:	Disc brake ϕ 190 mm
Brakes, rear:	Drum ϕ 110 mm

	LJ50QT-9M
Lubricants and operating fluids	
Fuel tank capacity:	6.0±0.1 Liters
Fuel:	Use fuel containing up to 5% ethanol by volume: E5. Unleaded fuel min. 95 Octane
Engine oil: Filling quantity:	SAE 15W/40 mineral oil API (SG or higher) 0.8 litres
Transmission oil: Filling quantity:	Hypoid-oil SAE 80W-90 API GL4 0.14 litres
Electrical Equipment	
Generator:	12V 175W
Battery:	12V 6Ah or 7Ah
Fuse:	15A
Head light:	Low beam/High beam 12V 9W/13.5W
Front position light:	12V 1.8W
Instrument lights Speedometer:	LED 12V 0.1W
Control lights indicator and high beam:	LED 12V 0.01W
Brake/rear light:	LED 12V 4.5W/1.7W
Front turn signal light:	LED 12V 1.5W
Rear turn signal light:	LED 12V 1.8W

	LJ50QT-9M
Dimensions and weights	
Overall length:	1845 mm
Width across handlebars:	690 mm without rear view mirror
Maximum height:	1130 mm without rear view mirror
Wheel base:	1310mm
Seat height:	785mm
Weight empty:	93 kg
Weight in running order:	97 kg
Max. permitted total weight:	257 kg
Top speed:	45 km/h or 25 km/h

Warranty conditions

In case of an occurring fault we will provide the customer with the following performances through the authorized dealer (seller) within the scope of its statutory warranty obligations:

1. Within warranty period, we will rectify any deficiencies caused by material or manufacturing faults through the authorized dealer (seller) by repairing or replacing the affected part according to the statutory warranty regulations. We may deny the requested repair or replacement of the faulty part if this would only be possible with disproportionately high costs.In this case we rectify the deficiency through the authorized dealer (seller) by applying the other possible type of subsequent fulfillment. If both types of subsequent fulfillment are only possible with unproportionately high costs, we deny the subsequent fulfillment all-together through the authorzied dealer (seller). The customer is then entitled to legal claims. Replaced parts pass over into the possession of us.
2. The installation of spare parts within the scope of warranty does not extend the warranty period that has started with the date of delivery of the motorcycle.

3. The warranty does not cover normal wear and tear caused by normal use as well as wear and tear caused by inappropriate handling and inappropriate use. Oxidation and corrosion are caused by environmental influences and are also not covered under warranty.

4. Warranty claims lodged by the customer will be rejected in case of: Manipulations to the motorcycle, installation of a different exhaust system, changes to the gearbox or secondary transmission ratio and installation of accessories or spare parts which have not been approved by us. Repairs carried out in workshops not authorized by us and the non-compliance with the maintenance intervals in the workshop of an authorized dealer will also cause the rejection of warranty claims.

5. When lodging a warranty claim the customer must present the correctly filled in service book to the seller.

6. The following table gives the customer an overview of the average limits of the respective wear parts.

List of wear parts

Wear parts	Wear limits
Tires, houses, rims	Depending on riding style, load and tire pressure the wear limit may already be reached after only 500 km or even earlier.
Wheels, hubs	Depending on riding style, load and tire pressure the wear limit may already be reached after only 1500 km or even earlier. Check during each maintenance. Oxidation is a lack of maintenance!
Oils, air filter, leakage inspection on engine	During the first inspection, then with every maintenance interval(every 3000 km/6000 km). Check oil level before every ride.
Spring fork, spring strut	Cleaning / inspection during every maintenance.
Lamps, incandescent bulbs, electric system	Depending on road conditions / unevenness of the road surface the lifetime will be reduced, this may already occur after 500 km.
Brake linings, brake shoes, brake lines	Depending on riding style and load these may already be worn after 3000 km, even earlier in trail running.
Seal rings, sealants, O-rings	Inspect during every maintenance and replace if necessary.
eals on engine, gearbox, fork and wheels	Depending on road conditions and care wear may start after 500 km. Dirt reduces the lifetime. Do not clean with a high pressure cleaner!
Wheel bearings, steering bearings	Depending on road conditions and care wear may start after 1500 km. Soiling of the wheel hub reduces the lifetime. Check during each maintenance interval, do not clean with a high pressure cleaner!
Swing arm bearing	Depending on load and care after 1500 km. Make sure to check at every service.
Cables	Depending on the maintenance that after 500 km. Check with every maintenance.
Coverings	Plastic parts will be damaged by caustic or penetrating cleaning agents or solvents.

List of wear parts

Wear parts	Wear limits
Air cleaner, oil filter	With each maintenance interval.
Starter battery, batteries, fuses, starter brushes	Depends on the ambient temperature. Failure usually starts from the 6th month and may occur earlier if riding short distances for a long time.
Mirror glasses	Depending on ambient temperatures and care failures can be expected in the 6th month, in winter operation even earlier. Oxidation is a lack of maintenance!
Brake cables, throttle cables	Depending on use and care, usually from the 6th month
Self-locking nuts, cotter pins locking plates bonded screw connections	During each maintenance interval or after unscrewing the nut or unlocking the lock.
Variomatic, CVT, rolls, belts	Depending on riding style and load these may be worn after 500 km.
Clutch linings / friction discs	Depending on riding style and load these may be worn after 500 km.
Pistons, cylinders, crankshaft, conrods, engine bearings	Depending on riding style, load and care, these parts may be worn out after 200 hours. Even sooner when riding primarily at full speed.
Spark plug	Inspection and replacement according to maintenance requirements.
Exhaust system, inspection of mountings	Depends on use and maintenance. Failure usually start from the sixth month, and occur earlier in the winter or short distances riding.

INSPECTION PLAN

Please observe the following:
- During and after the warranty period all inspections should solely be performed by a specialised dealer approved by us.

- Observe the inspection intervals and have the specialised dealer confirm them on the guarantee certificate.

- Use only original spare parts.

CAUTION

In case of non-compliance the warranty will become null and void.
The various activities carried out are listed on the inspection plan.
During the warranty period the following inspection intervals must be complied with:

At 1.000 km (1st service)
Every 3.000 km / or after 6 months
Every 6.000 km / or after 12 months

After the warranty period the inspection intevals specified in this manual must be applied as follows:

Every 3.000 km / 6 months
Every 6.000 km / 12 months

WARNING

For safety reasons, do not carry out any repair or adjustment activities to the scooter and chassis that exceed a closely restricted scope. Tinkering with safety-relevant parts could threaten the safety of yourself and third parties.

This applied especially to the exhaust system, carburettor, ignition system, fork column, brake system and lights.

Before starting work on the electrical system, disconnect the minus terminal of the battery.

I = Inspektion, cleaning, and adjustment
R = Replacement
C = Cleaning (replaced if necessary)
S = Lubrication

Component Assembly	Before each trip	1 st service after 300 km	Every 1.000 km / 1 months	Every 3.000 km / 3 months	Every 6.000 km / 6 months	Every 12.000 km / 12 months
Air cleaner foam	I	I		C	C	R
Oil filter (screen)		C			C	C
Engine oil	I	R	Every 1000km R			
Fuel filter	I	I			I	R
Spark plug	I	I	I	I		R
Ignition time		I	I	I		
Valve clearance		I	I		I	
Compression check				I		
Carburetor (Idle speed)	I	I	I	I		
Throttle cable adjustment	I	I	I	I		
Transmission oil	I	A	A	I	R	
Transmission check for leakage	I	I	I	I		
Crankecase check for leakage	I	I	I	I		
Crankecase vetilation		I	I	I		
Driving belt, fight weight				I	I/R	
Clutch discs				I	I/R	

INSPECTION PLAN

I = Inspektion, cleaning, and adjustment
R = Replacement
C = Cleaning (replaced if necessary)
S = Lubrication

Component Assembly	Before each trip	1 st service after 300 km	Every 1.000 km / 3 months	Every 3.000 km / 3 months	Every 6.000 km / 6 months	Every 12.000 km / 12 months
Bolts and nuts (engine)	I	I	I	I		
Compression teat				I		
Exhaust system		I	I	I		
Fuel tank, fuel hoses	I	I	I	I		
Battery	I	I	I	I		
Stearing and bearings	I	I	I	I		
Front and rear suspension	I	I	I		I	
Shock absorption	I	I	I		I	
Tire pressure	I	I	I	I		
Brake function, brake pads	I	I	I	I		
Brake fluid	I	I	I	I		R / every 2 year
Main-and side stand	I	I	I	I/S		
Bolts and nuts (chassis)	I	I	I	I		

1.000 km/1 months 1st service dealer stamp: km..... date.....	After 3.000 km/6 months dealer stamp: km..... date.....	After 6.000 km/12 months dealer stamp: km..... date.....	After 9.000 km/18 months dealer stamp: km..... date.....
After 12.000 km/24 months dealer stamp: km..... date.....	After 15.000 km/30 months dealer stamp: km..... date.....	After 18.000 km/36 months dealer stamp: km..... date.....	After 21.000 km/42 months dealer stamp: km..... date.....

MAINTENANCE CONFIRMATION

New brake fluid Yes no km..... date..... Stamp, signature	New brake fluid Yes no km..... date..... Stamp, signature	New brake fluid Yes no km..... date..... Stamp, signature	New brake fluid Yes no km..... date..... Stamp, signature
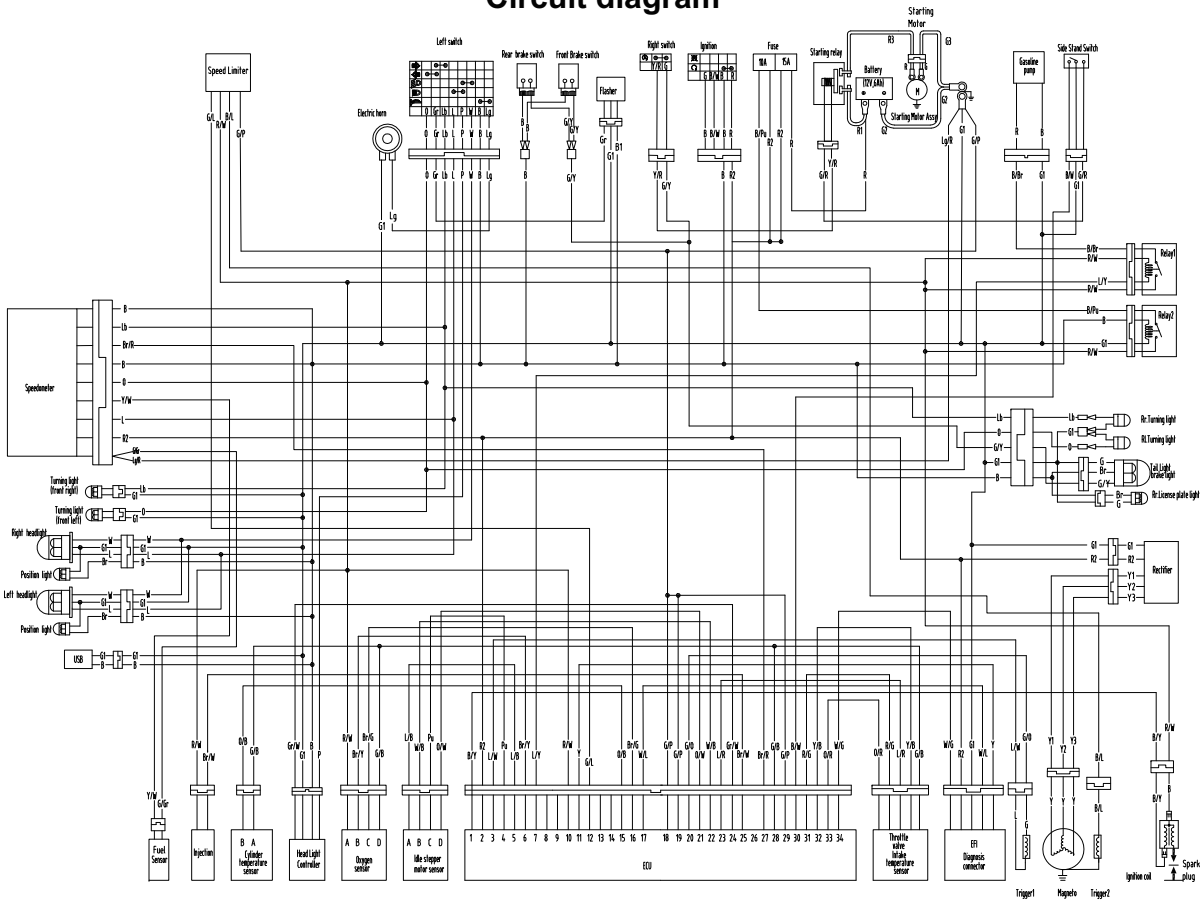
Circuit diagram